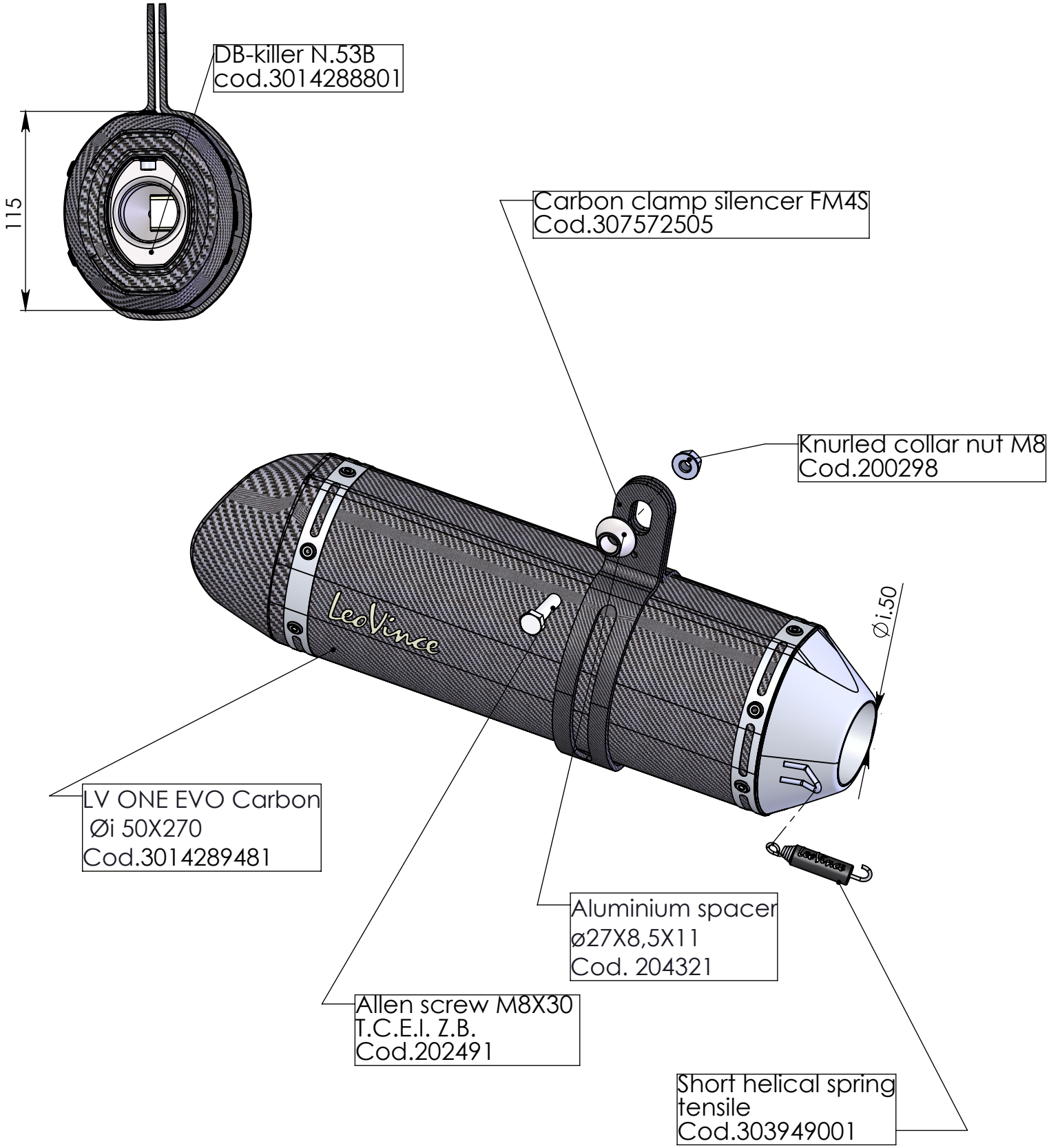

ART. 9776

MUFFLER KIT - LV ONE EVO - CARBON

FITTING KIT Cod. 309772601