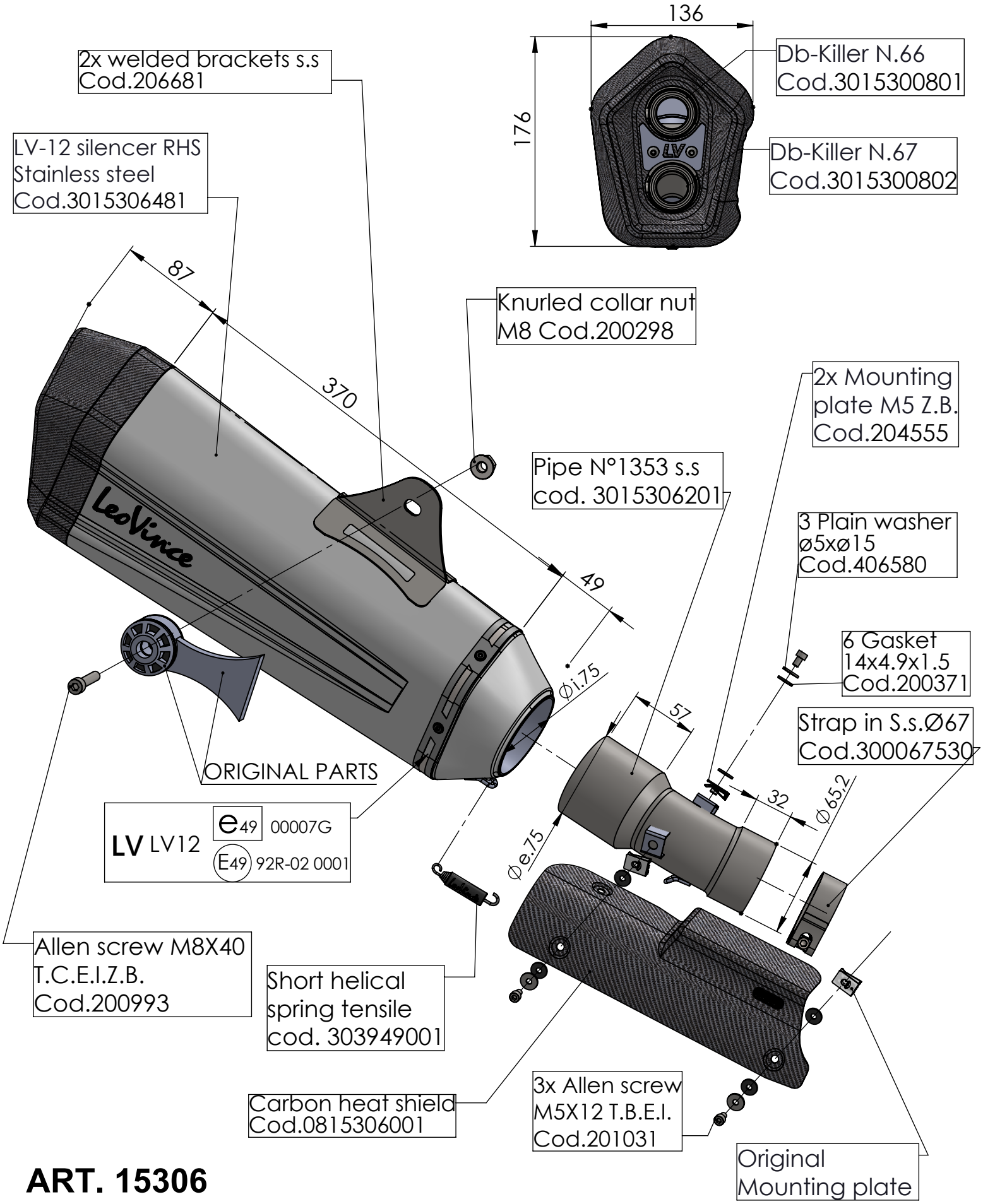

ART. 15306

BMW R 1250 R / RS
(Fits with original panniers) (Fits with original centre stand)

SLIP-ON - LV-12 - STAINLESS STEEL - APPROVED