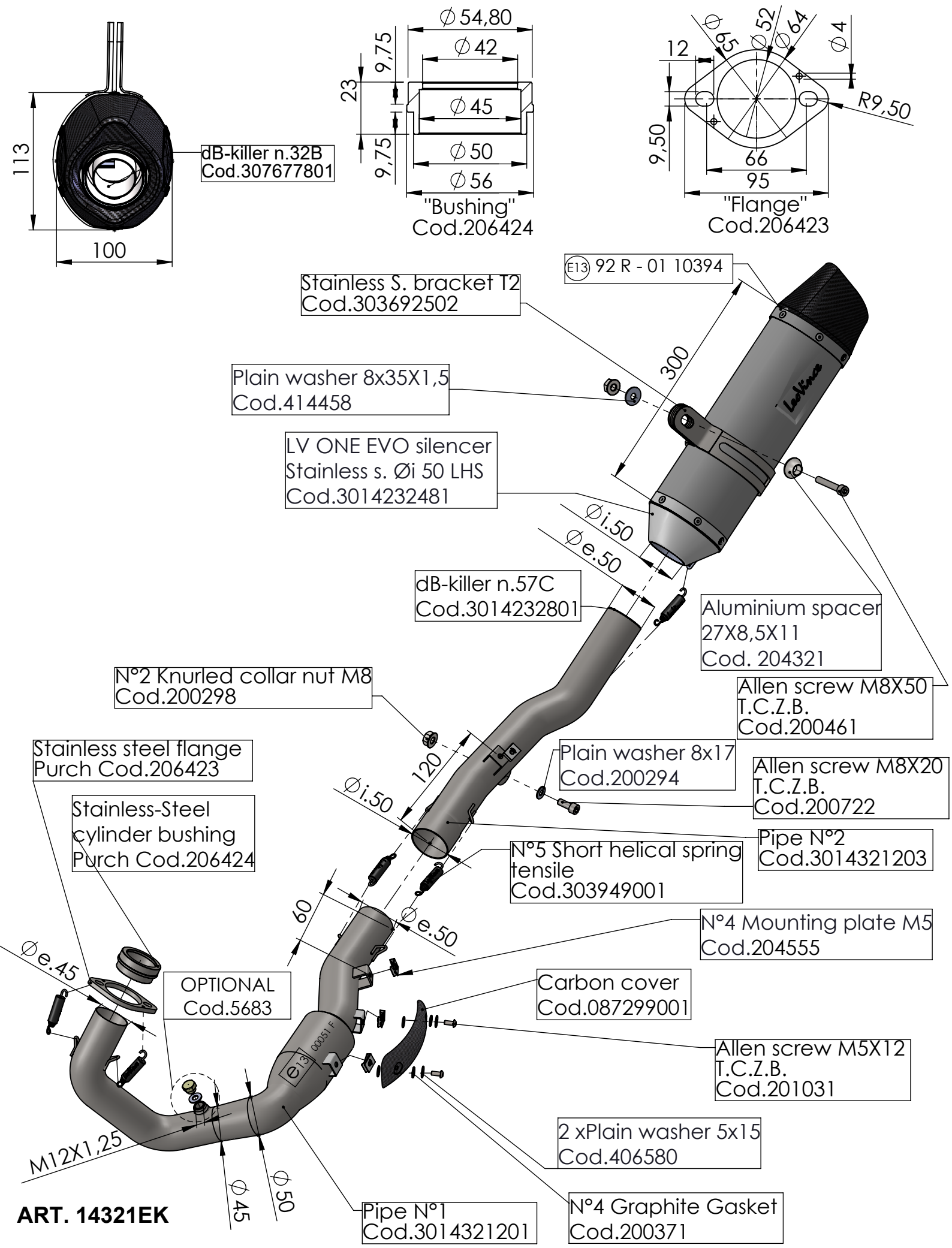

ART. 14321EK

KTM 690 ENDURO R - SMC R

FULL SYSTEM 1/1 - LV ONE EVO - STAINLESS S. - APPROVED