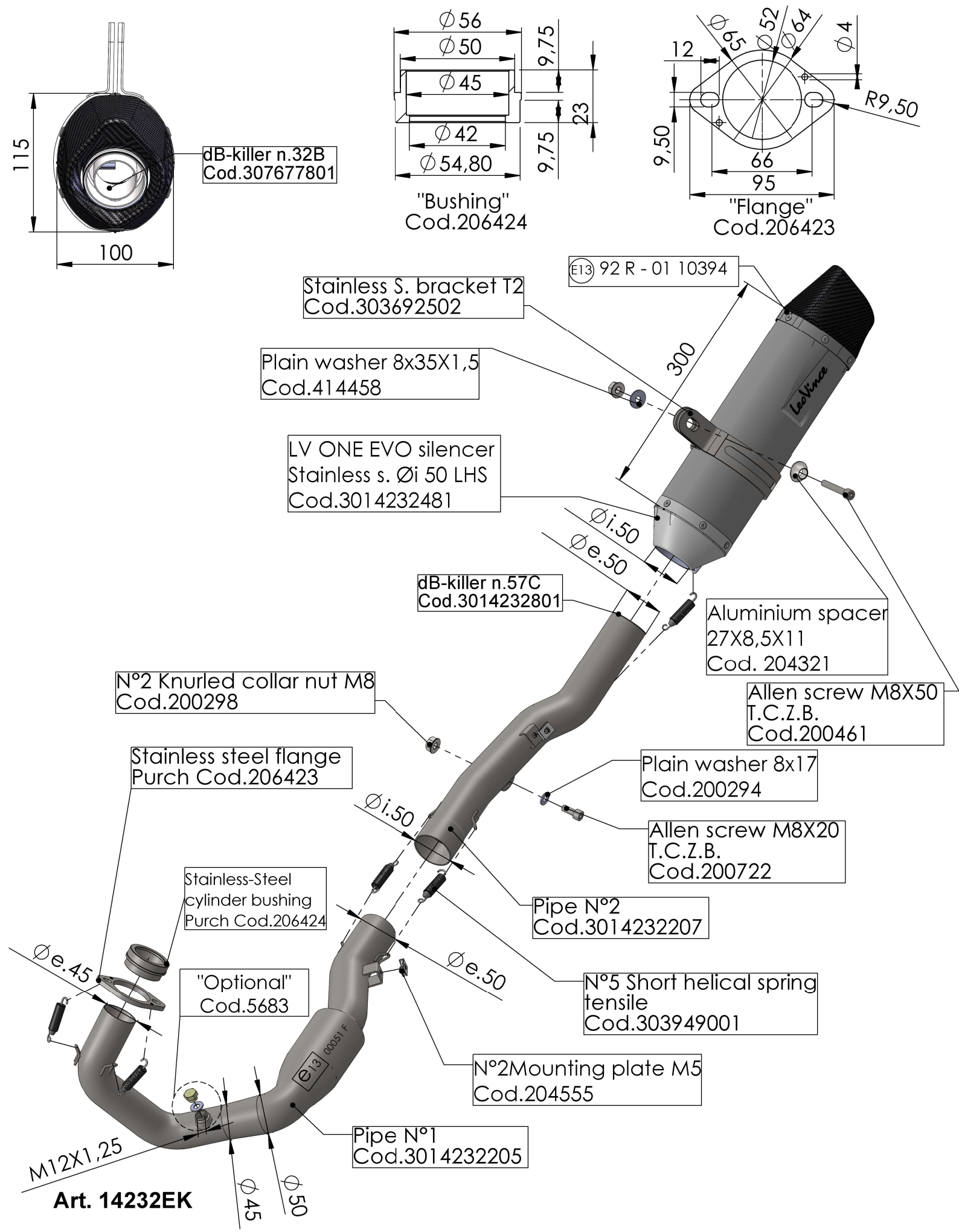

Art. 14232EK

Husqvarna 701

FULL SYSTEM 1/1 - LV ONE EVO - STAINLESS S.