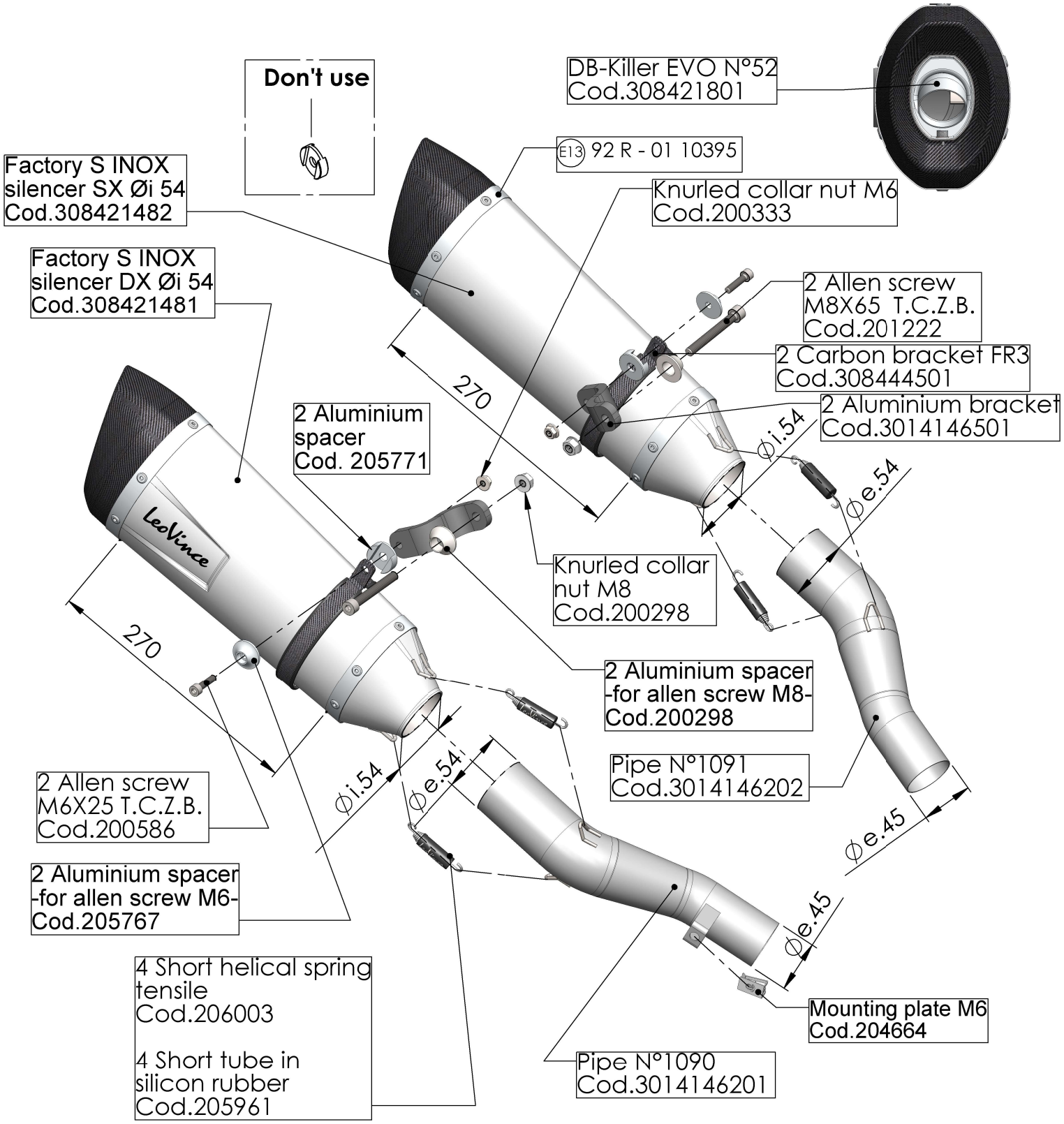

Art. 14223S

KAWASAKI Z1000/Z1000SX/NINJA1000/ABS (US only)
(Fits with original panniers)

SLIP-ON - Factory S -Stainless s.-Approved