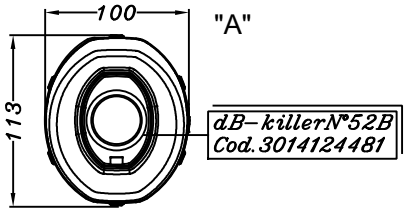

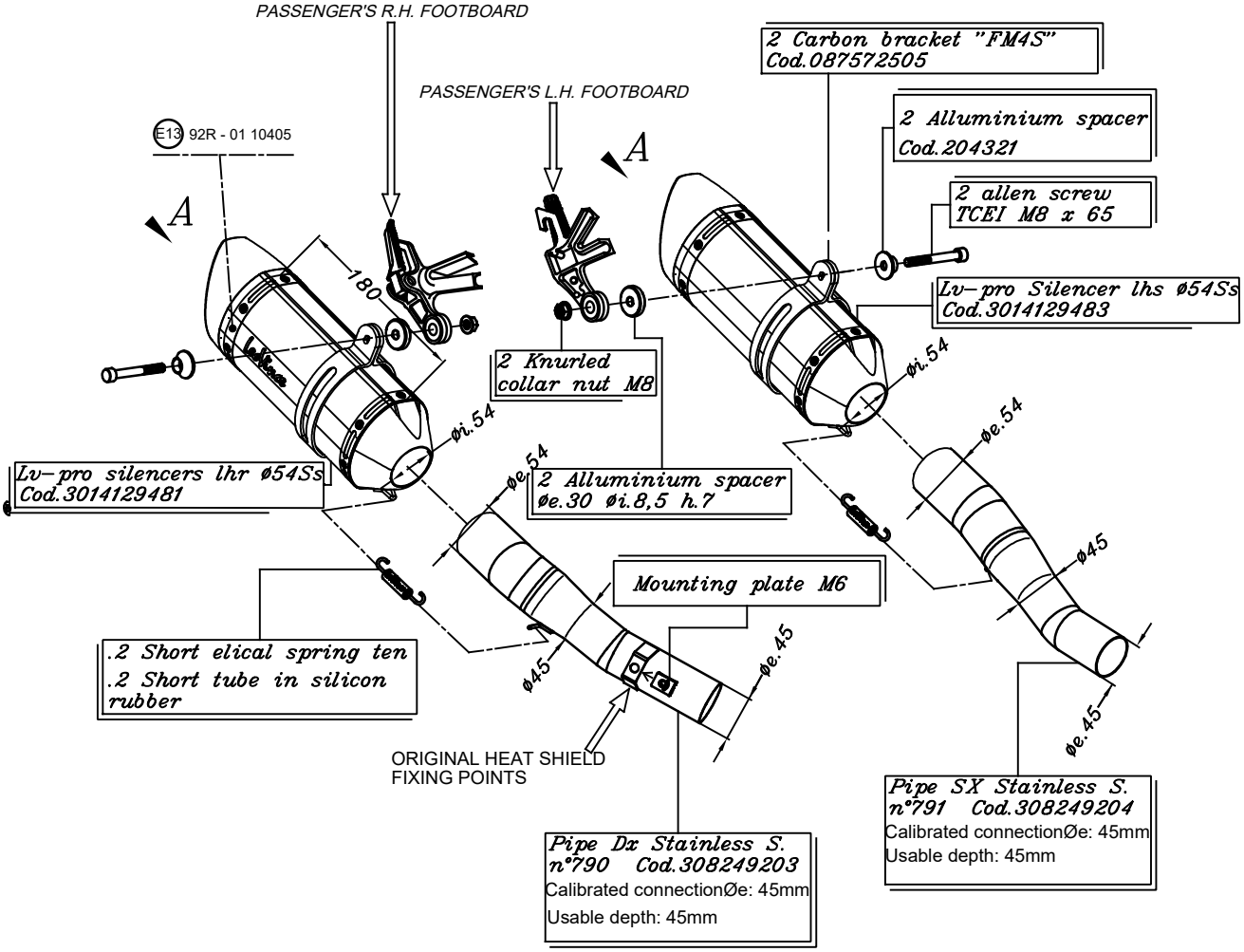

Art.14221E

KAWASAKI Z 1000/Z 1000 SX/NINJA 1000 (US only)

(DO NOT FIT WHIT ORIGINAL PANNIERS)

Slip-on "LV PRO"- STAINLESS S.- APPROVED