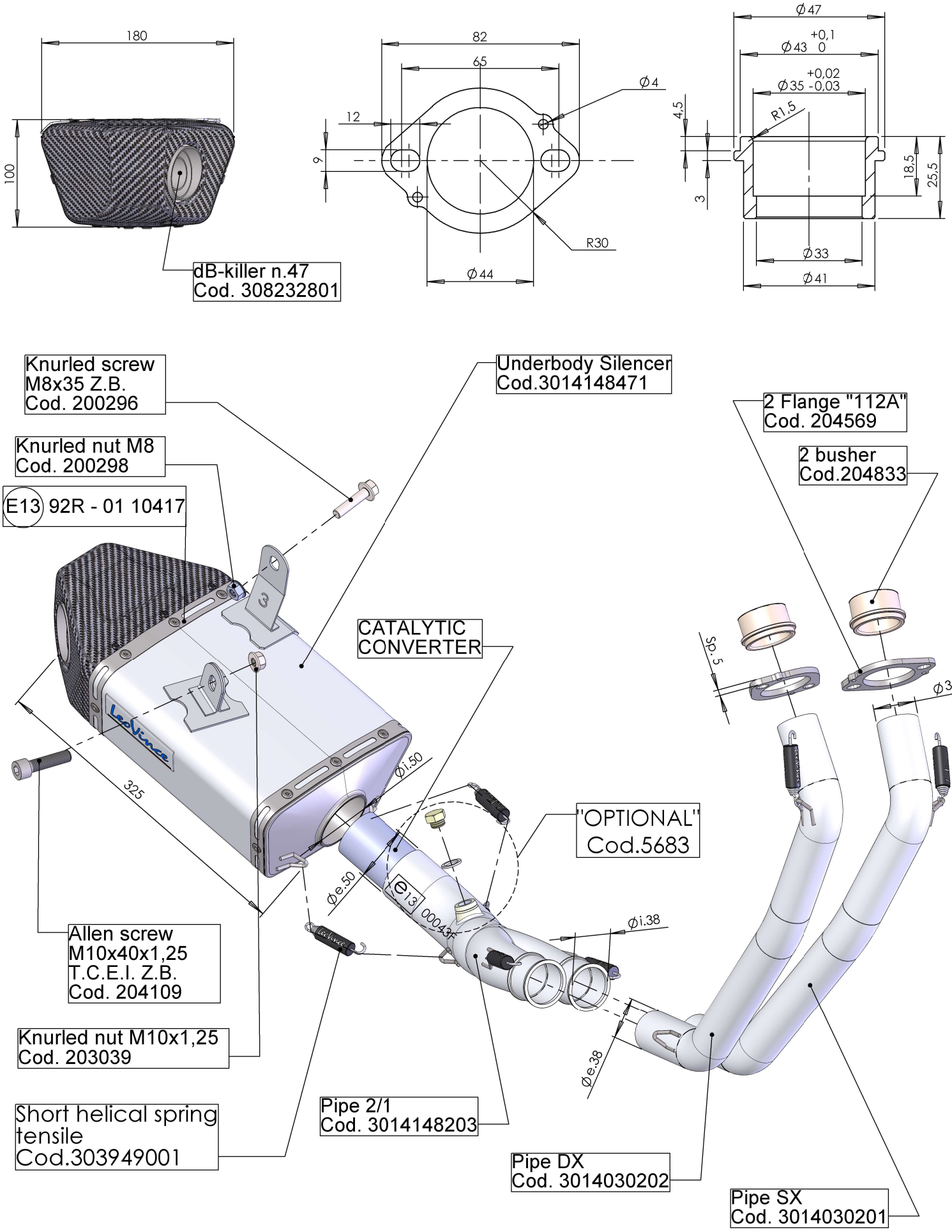

ART. 14148K

YAMAHA XSR 700 - MT07 -MT07 TRACER

FULL SYSTEM 2/1 - SBK UNDERBODY - APPROVED