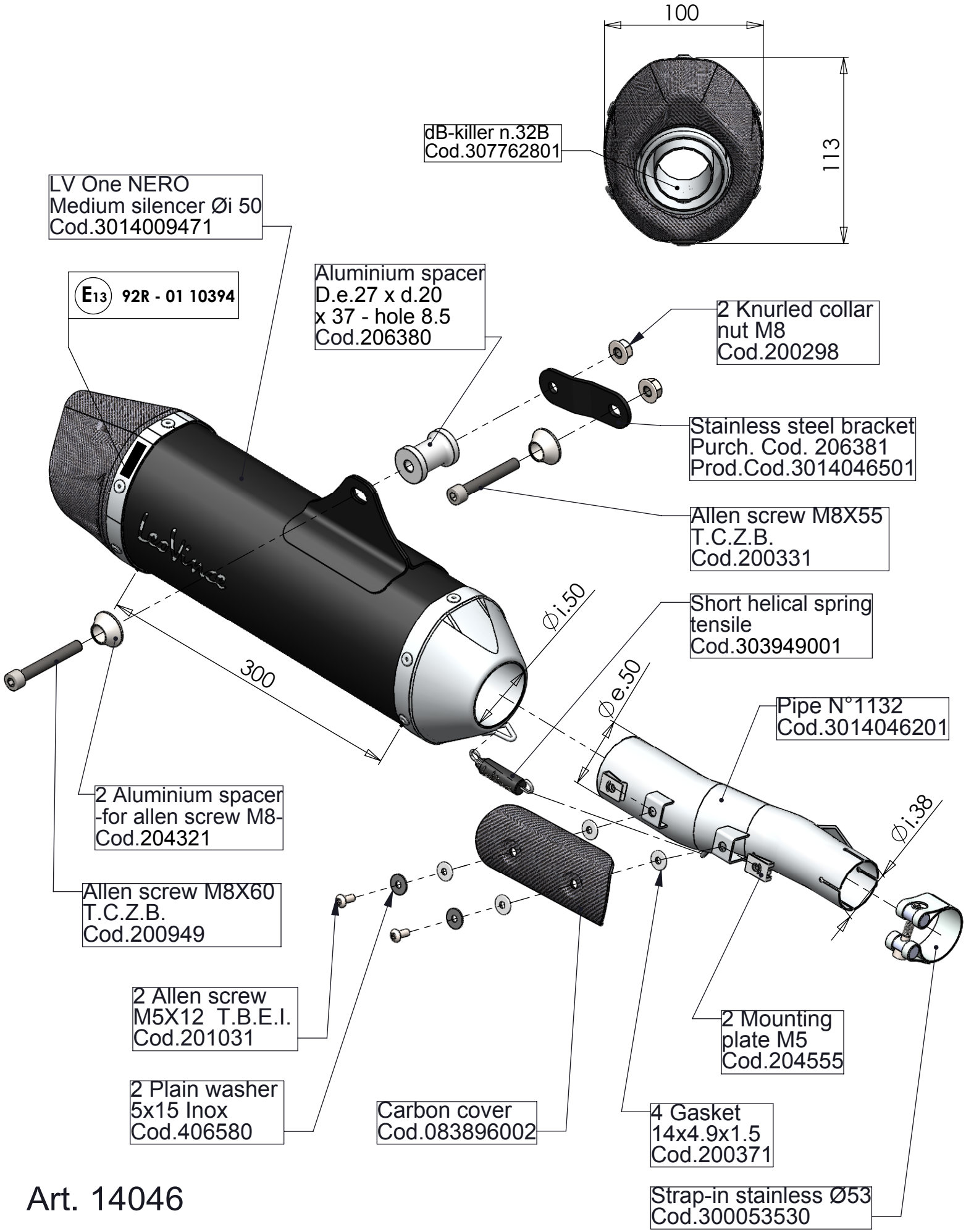

Art. 14046

HONDA X-ADV 750

SLIP-ON - "NERO" MEDIUM - **APPROVED**