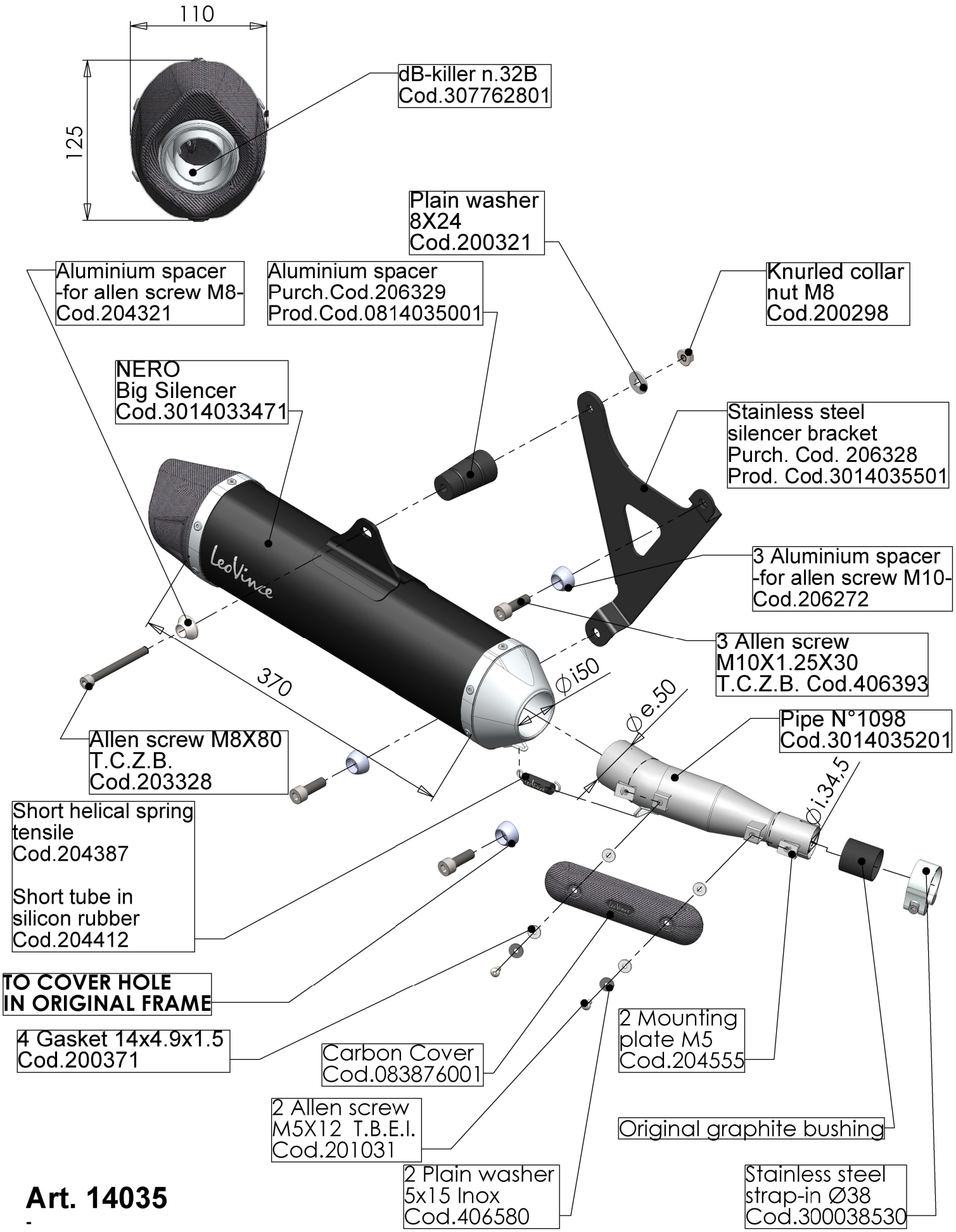

Art. 14035

-

HONDA SH 300i ABS

-

SLIP-ON - NERO - APPROVED