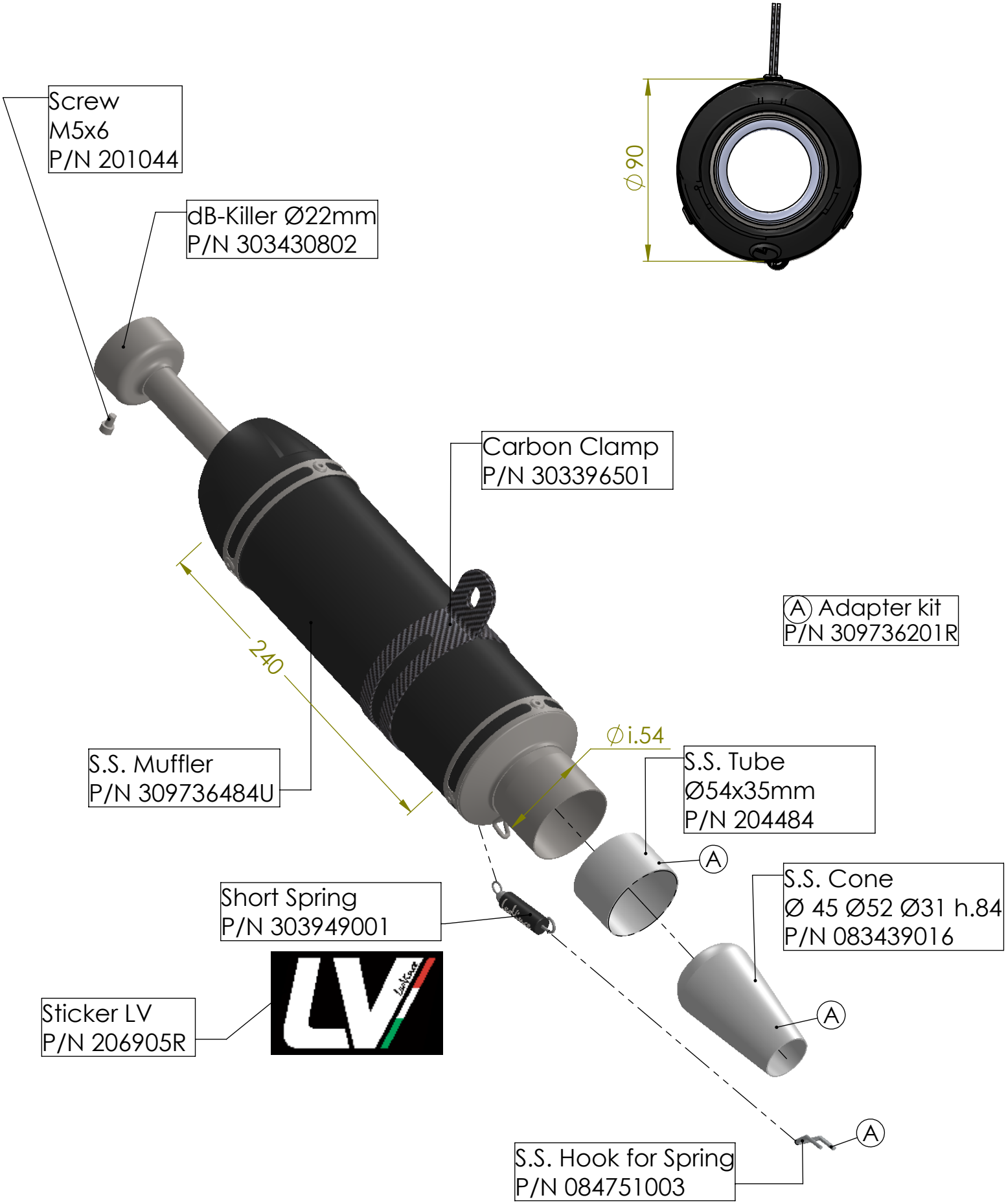

ART. 9736EBU

ALL BIKES

MUFFLER KIT GP CORSA EVO BLACK EDITION